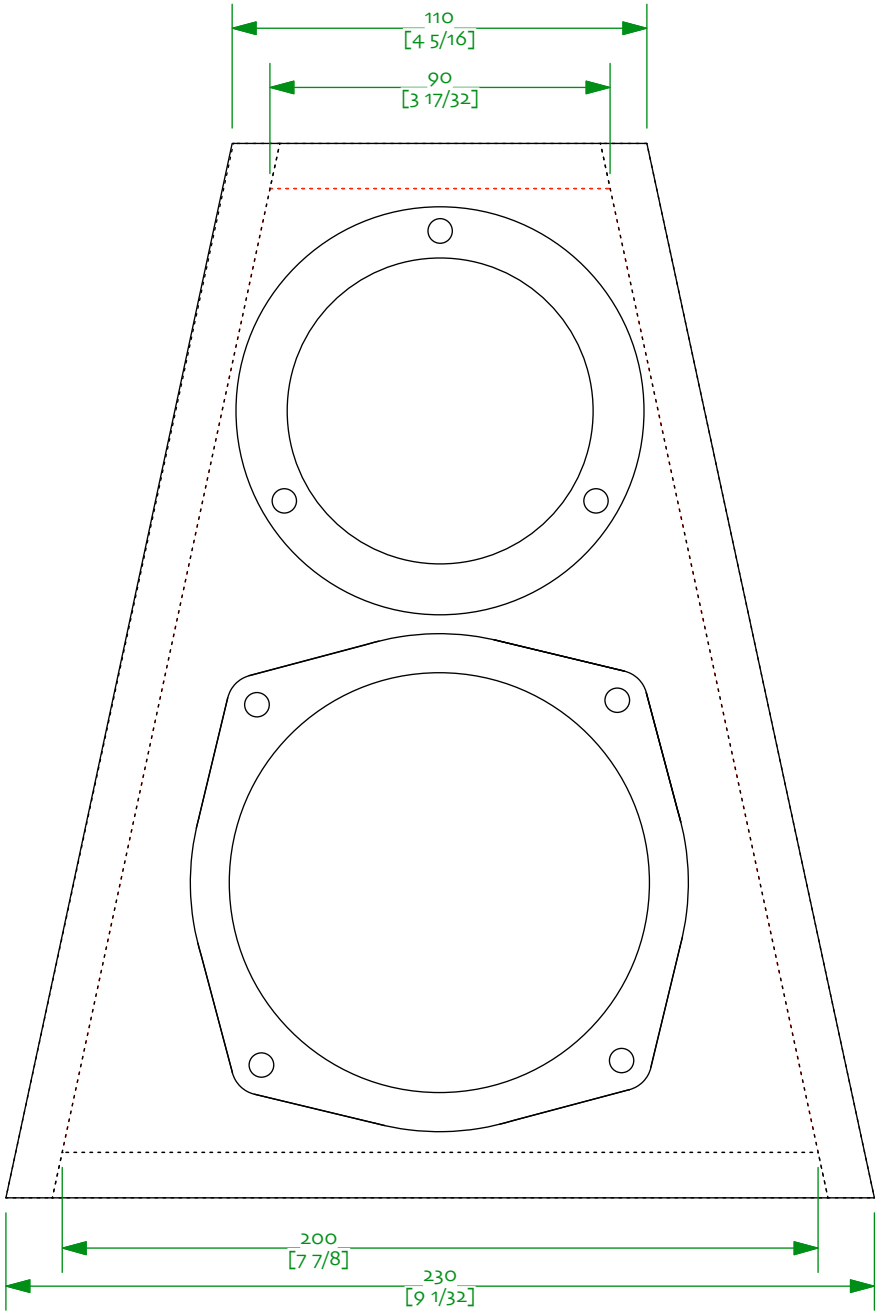

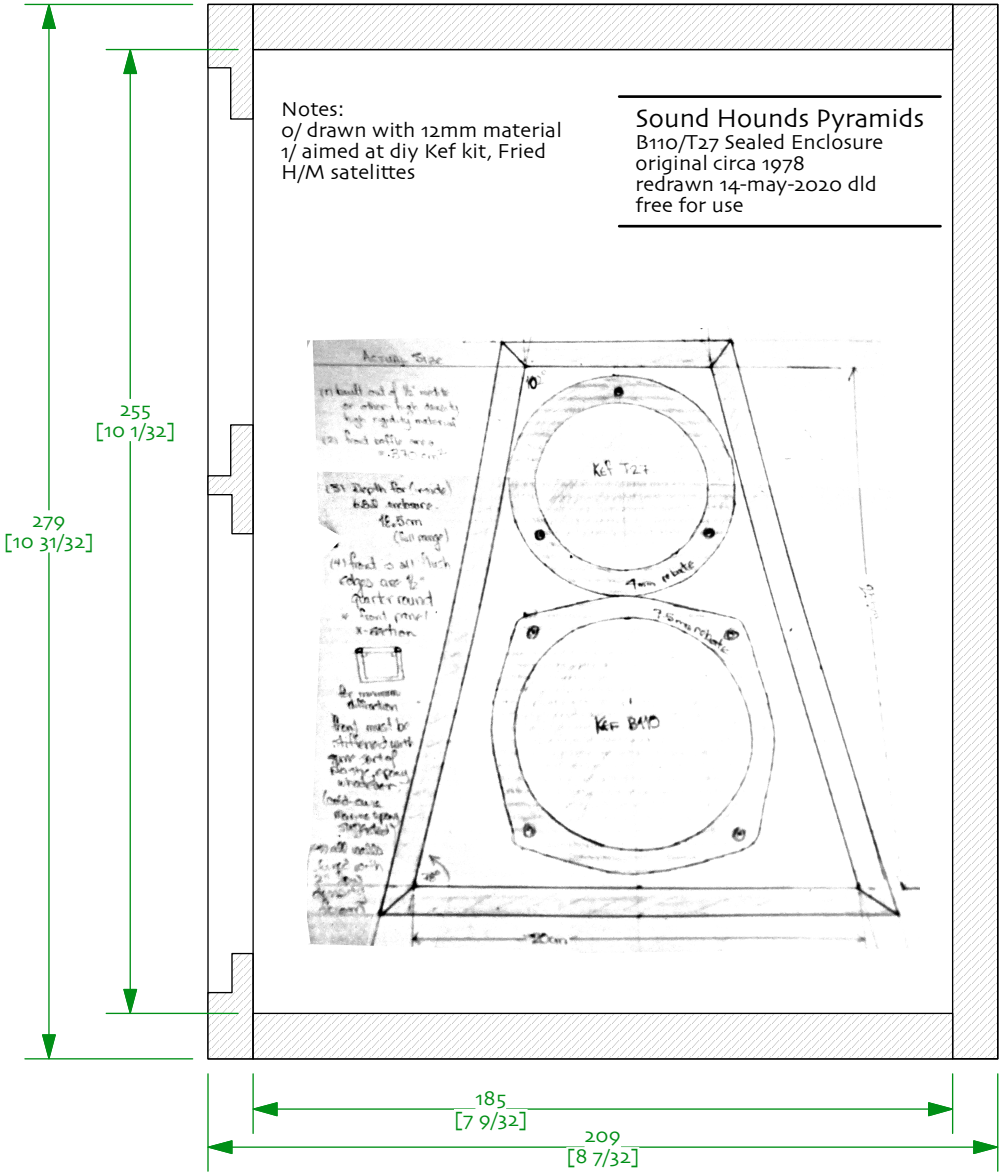

Notes:
0/ drawn with 12mm material
1/ aimed at diy Kef kit, Fried H/M satelittes

Sound Hounds Pyramids

B110/T27 Sealed Enclosure
original circa 1978
redrawn 14-may-2020 dld
free for use